Technical Drawing

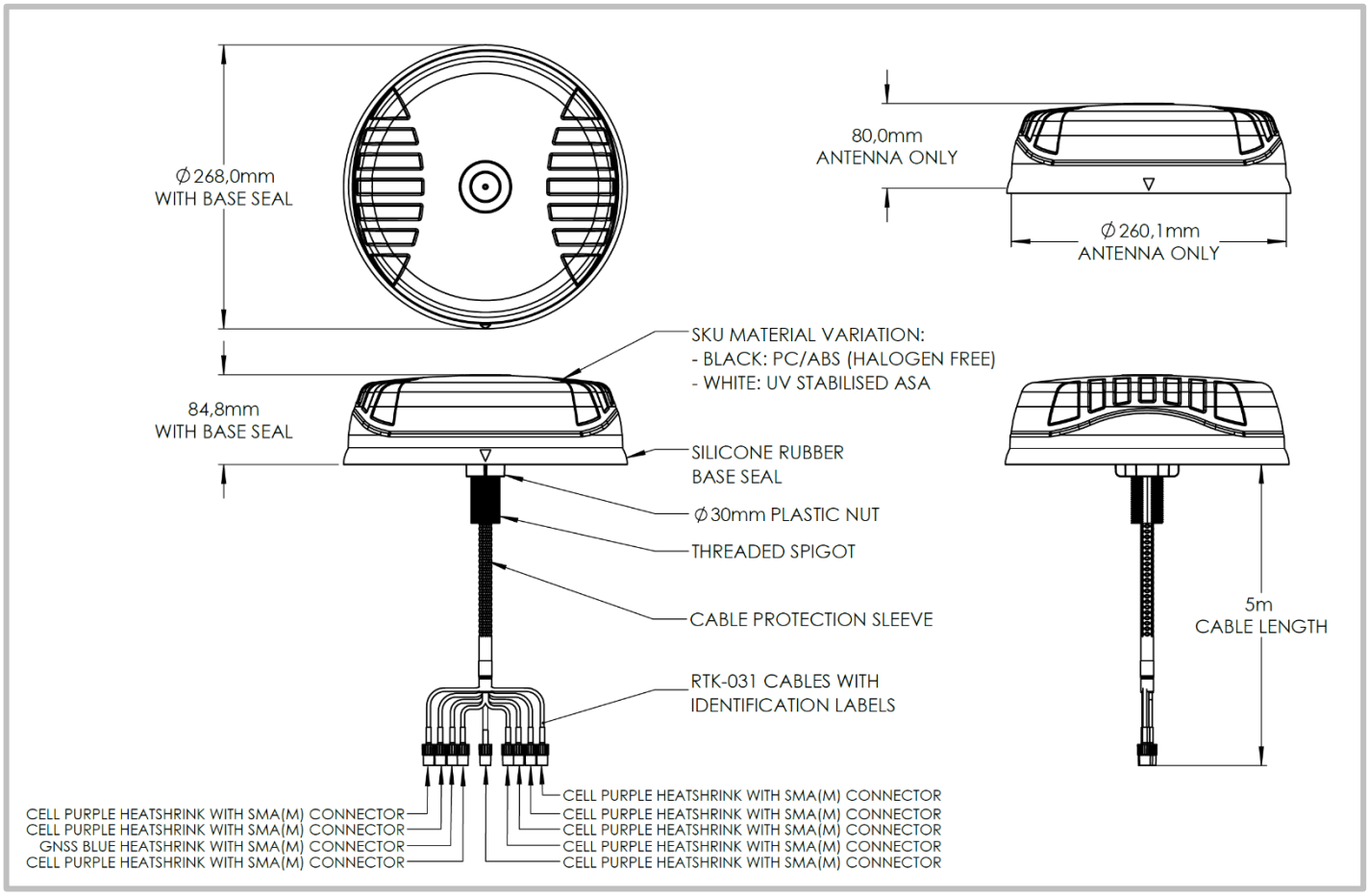

©2026 Poynting Antennas (Pty) Ltd. All rights reserved
Product Specifications may change without prior notice
Revised: September 2026

Regulatory Compliance: RoHS 2011/65/EU Compliant | ISO 9001:2015
Document version: TS-A-MIMO-8-V1-801-5M REV 1.0
www.poynting.tech