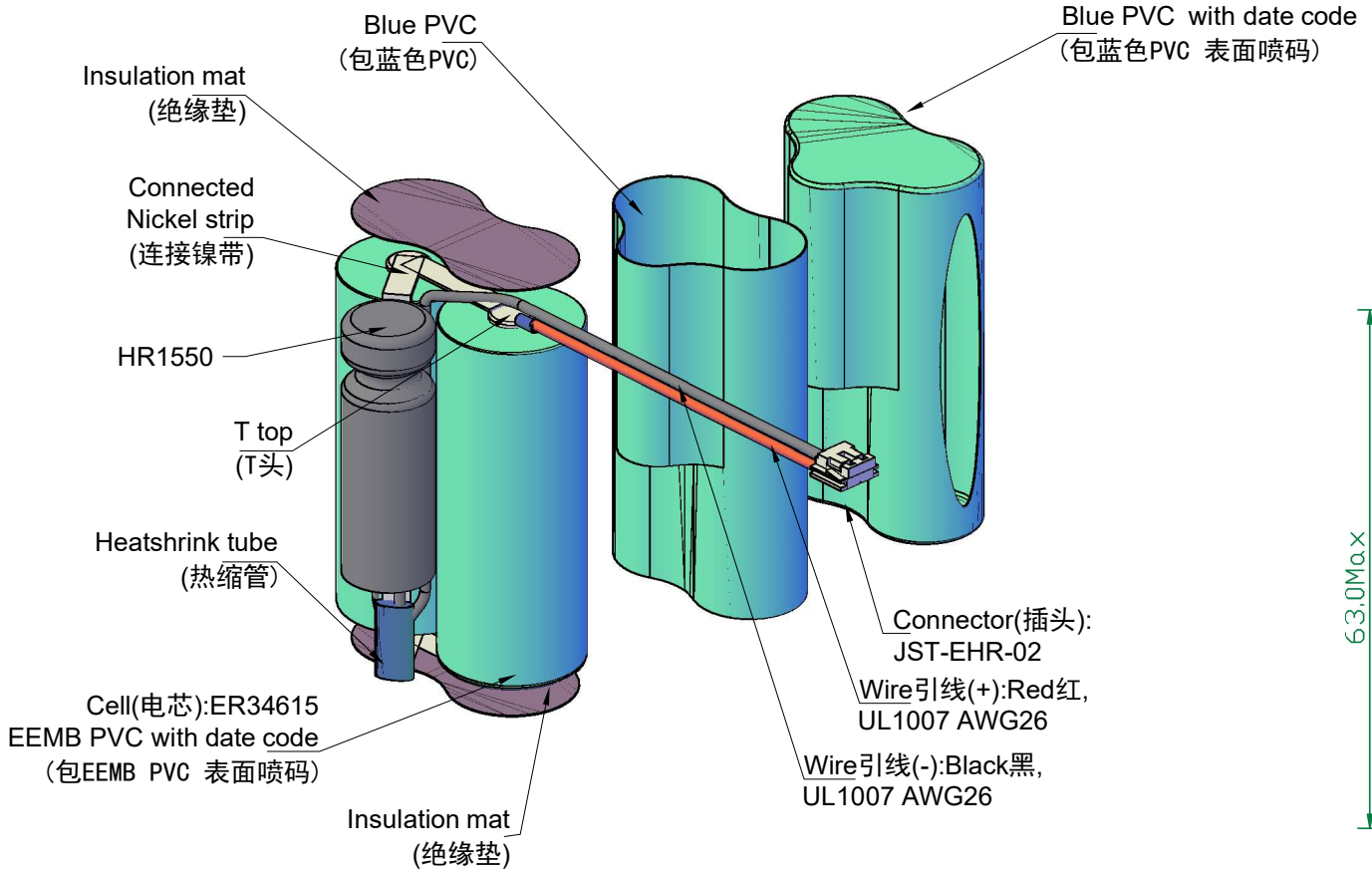

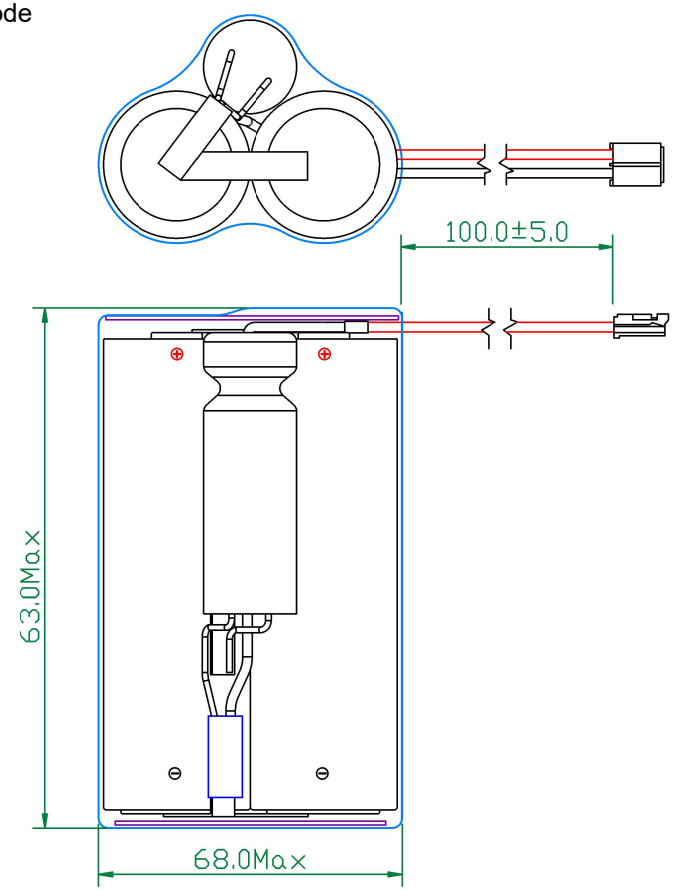

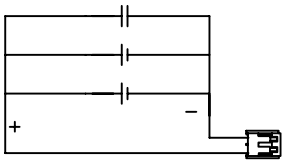

Circuit diagram

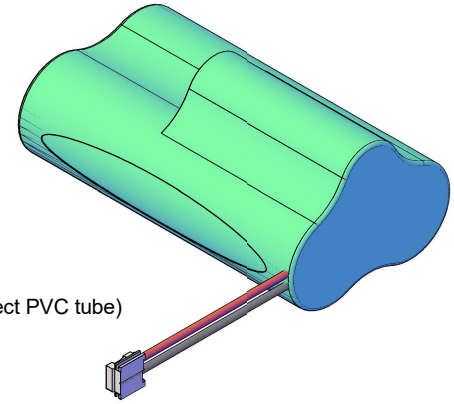

Remark(备注):

1. Pack:3.6V 36000mAh,With wires and Connector,EEMB PVC.
(Fix horizontal wire by lead PVC tube and then cover the whole battery with erect PVC tube)
电池包:3.6V 36000mAh.带输出引线及插头,包EEMB PVC.
(先用竖套PVC固定引线,再用横套)
2. RoHS Compliant.
严格按照RoHS要求生产.

EEMB BATTERY		Drawn:	Summer	Revise No.:	E4-2009
		Group:	Group9	Projection:	
		Approved1:		Page:	1/1
Title	ER34615-2-HR1550-LD/	Approved2:		Scale:	1 : 1
File NO.	A20852	Draw Date:	2020/10/27	Unit:	mm