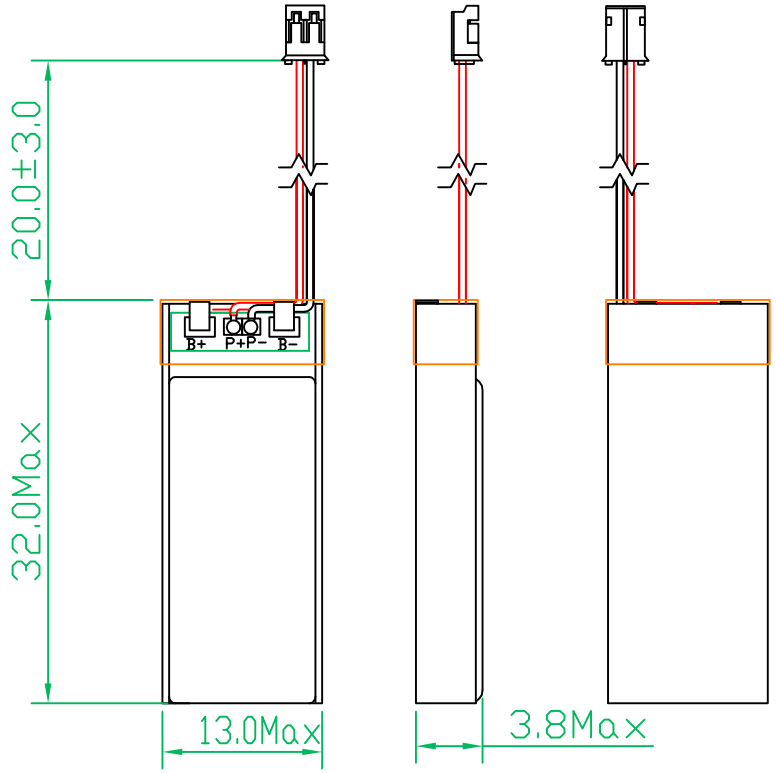

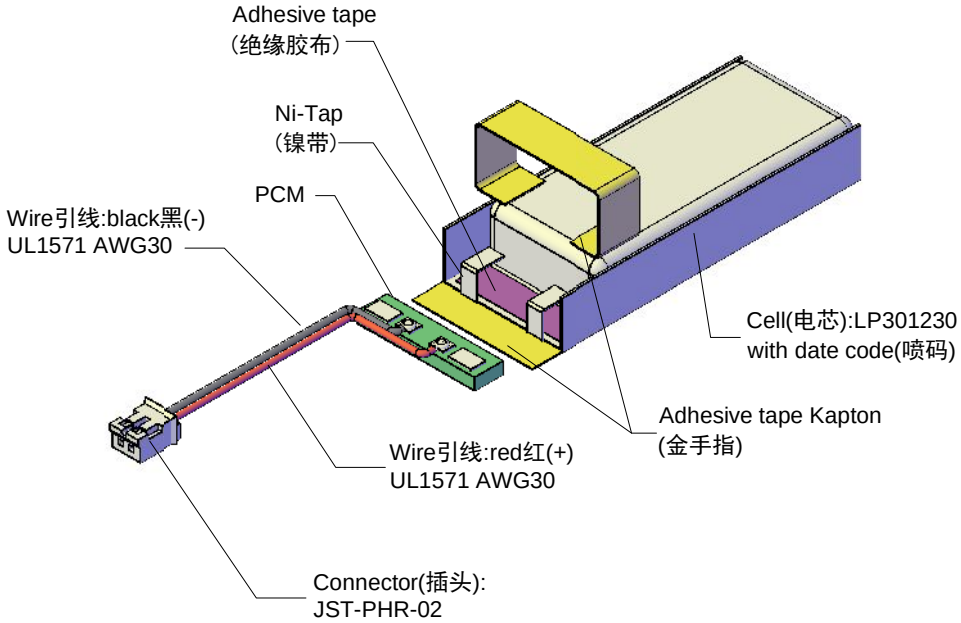

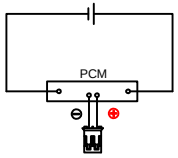

Circuit diagram

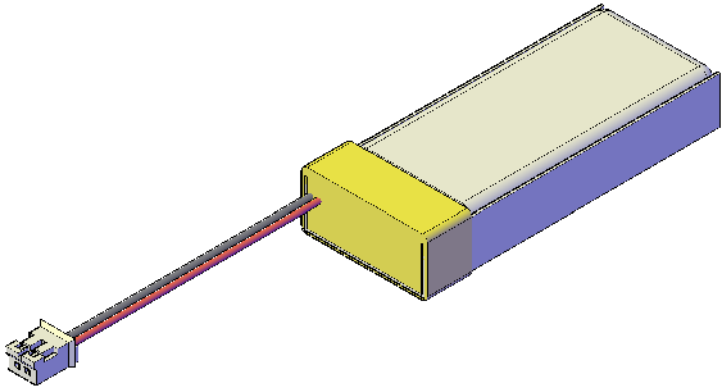

Model:	LP301230		Battery protection Related Value: (相关的电池保护值)	Overcharge Detection Voltage(V) 过充保护电压(V)	4.28±0.05
Battery pack specification 电池组规格	Min.Capacity 最低容量(mAh) (0.2C,25±3°C) ※Single cell capacity (单体电芯容量)	65		Overdischarge Detection Voltage(V) 过放保护电压(V)	3.0±0.1
	Typical Capacity 典型容量(mAh) (0.2C,25±3°C) ※Single cell capacity (单体电芯容量)	70		Limited to Max loading current 仅用于最大的负载电流 peak value (A) 峰值 0.21 (A) constant (A) 持续 0.07 (A)	
	Nominal Voltage 标称电压(V)	3.7		Customer required Max loading current 客户要求最大的负载电流 peak value (A) 峰值____ (A) constant (A) 持续____ (A)	
	Internal impedance 内阻(≦) (mΩ,AC 1KHZ)	600		If actual application loading current is bigger than EEMB suggested, please indicate.The application profile is important for an appropriate PCM design. (如果实际应用的负载电流大于EEMB提供值, 请提出来. 实际的应用情况对PCM的设计至关重要〜	
Ambient Conditions 环境温度	Charge Temp.充电温度(°C)	0~45			
	Discharge Temp.放电温度(°C)	-20~60			
	Humidity(湿度)	65±20%			

Remark(备注):
1. No scratch,distoration,discoloration and leakage on the appearance of the cell(电池表面无划痕 `变形 `污点及漏液等现象).
2. Rohs compliant(严格按照ROHS要求生产).

EEMB BATTERY		Drawn:	Summer	Revise No.:	E4-2009
		Group:	Group19	Projection:	
		Approved1:		Page:	1/1
Title	LP301230-PCM-LD/	Approved2:		Scale:	1.5 : 1
File NO.	A20494	Draw Date:	2020/07/08	Unit:	mm